Nº	Recambio	Nº	Recambio
1	Left part, table	131	Arc plate
2	Front rail	132	Steel ring
3	Cross cylinder head screw Mx25	133	Self-lock nut M6
4	Cover plate	134	Chip-case guide panel, front
5	Hex head screw Mx30	135	Pan head screw M6x10
6	Flat washer 8mm	136	Flat washer 6mm
7	Hex nut M8	137	Square, stop
8	Flat washer 8mm	138	Ring
9	Right part, table	139	Handle, bevel
10	Rear rail	140	Countersunk head screw M6x35
11	Main part, table	141	Flat washer 6mm
12	Hex head screw M8x20	142	Hex nut M6
13	Countersunk head screw M5x8	143	Flat washer 6 mm
100	Spring	144	Bevel angle scale
101	Set collar	145	Lock knob
102	Hex socket head cap screw M5x20	146	Hex shape shaft
103	Ring circlips 25mm	147	Thread tube
104	Chip-case guide panel, rear	148	Thread mount
105	Countersunk flat head screw M5x6	149	Nylon ring
106	Rubber foam	150	Pan head screw M5x6
107	Spring roll	151	Clamp, plate
108	Pan head screw M4x8	152	Stop, moving
109	Tube	153	Flat washer 5 mm
110	Guide shaft	154	Pan head screw M5x10
111	“O” ring	155	Pan head screw M6x10
112	Hex thin nut M16x1.5	156	Flat washer 6mm
113	Special screw, Stop	157	Square, stop
114	Setting tube	158	Self-lock nut M4
115	Cup-washer	159	Bevel indicator
116	Spacer	161	Carriage bolt
117	Gear rod	163	Set collar
118	Self-lock nut M6	164	Hex socket head cap screw
119	Hex head screw M6x16	165	Rise-lower handle
120	Bearing mount	166	Flat washer 6 mm
121	Flat washer	167	Pan head screw M5x6
122	Steel ring	168	Rise-lower indicator
123	Flat washer M8	169	Handle
124	Self-lock nut M8		
125	Mount base		
126	Bearing LBP254058		
127	Self-lock nut M6		
128	Spring		
129	Spring mount plate		
130	Pan head screw M6x10		

Nº	Recambio	Nº	Recambio
172	Hex head screw	251	Dust collector
173	Flat washer	252	Bearing mount
174	Draw gear rod	253	Spindle
175	Lock knob draw gear	254	Adjustment ring
176	Draw gear knob	255	Ball bearing 80103
201	Countersunk head screw M6x10	256	Circlip 35 mm
202	Bracket, motor	257	Pulley, spindle
203	Flat washer 6 mm	258	Belt
204	Left-hand hex head screw M8x10	259	Quill tube
205	Ring plate, locking	260	Ball bearing 80301
206	Motor pulley	261	Pulley, drive
207	Motor	262	Flat washer 8mm
208	Pan head screw M4x6	263	Hex nut M8
209	Pan head screw M4x10	301	Rear gear panel
211	Flat washer 5mm	302	Hex nut M8
212	Guard fold	303	Rear panel
216	Left-hand hex nut M10	304	Flat washer 6mm
217	Outer blade collar	305	Pan head screw M6x20
218	Self-locking hex nut M10	306	Right panel
219	Flat washer 10 mm	307	Suction exit
221	Pressure plate	308	Flat washer 8 mm
222	Riving knife	309	Socket head cap screw M4x8
223	Guide plate	310	Hex nut M6
224	Blade guard	311	Bracket
225	Dust collecting tube	312	Taping screw M4x12
226	Steel ring	313	Flat washer 8mm
227	Flat washer 6 mm	314	Hex head screw M8x30
229	Cylinder head screw M6x20	315	Cross pan head screw M4x8
231	Hex head screw M6x10	316	Cross pan head screw M4x60
232	Tube	317	Check plate
233	Carriage screw M10x35	318	On/off switch
234	Hex head screw M6x10	319	Socket head cap screw M4x12
235	Flat washer 6mm	321	Mount plate, switch
236	Lever	322	Left panel
237	Hex nut M6	323	Flat washer 4mm
238	Countersunk head screw M6x10	324	Hex nut M4
239	Inner blade collar	325	Front panel
241	Circlip 32mm	326	Front gear panel
243	Hex nut M6	327	Bevel scale
244	Mount, riving knife	328	Flat washer 6mm
245	Torsion	329	Hex head screw M6x20
246	Ball bearing 80301	330	Stop pin
247	Pan head screw M4x6	331	Spring
248	Chipcase	332	Stop cap
249	Wiring band		

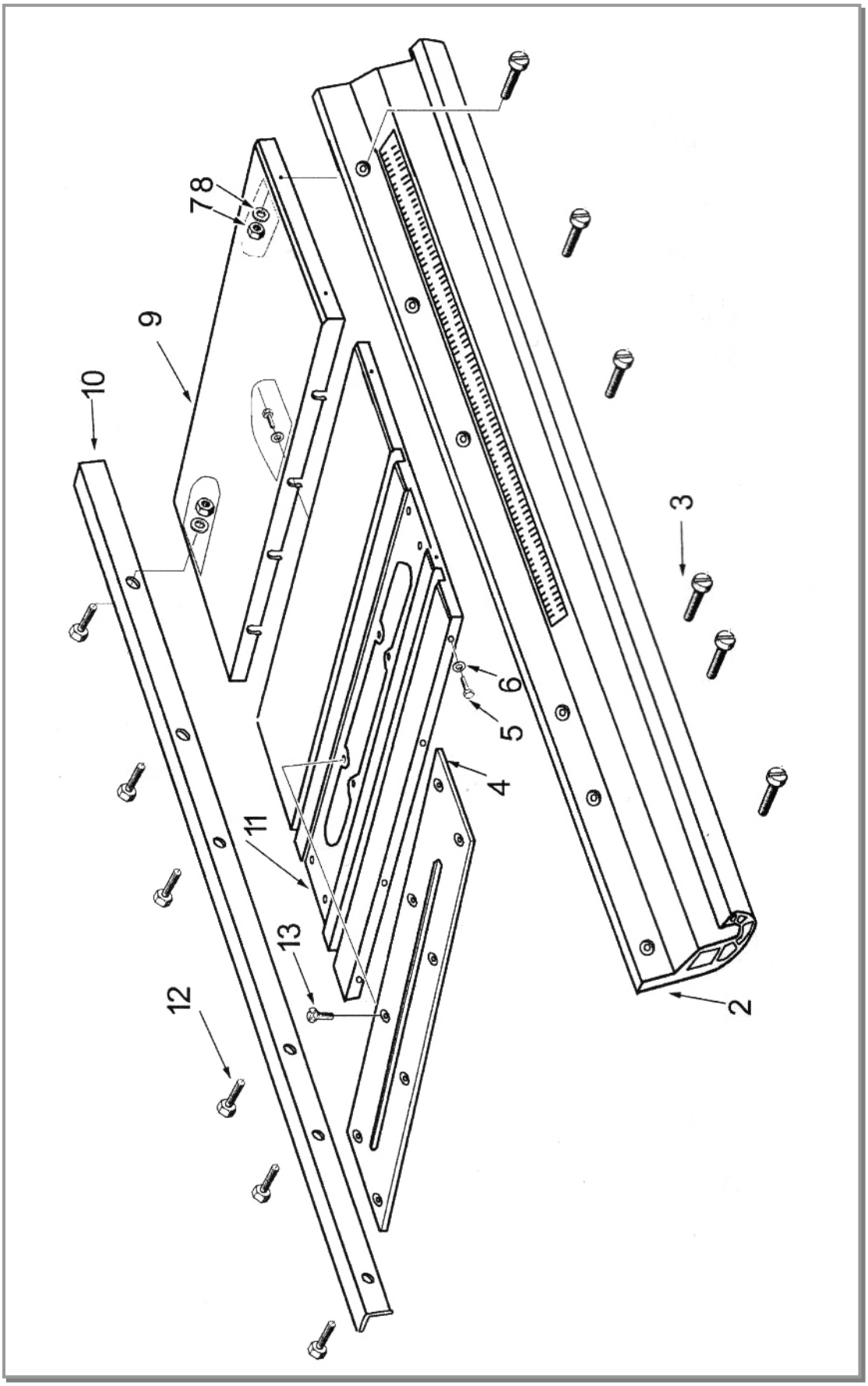
78
9
10
3
6
5
4
11
13
12
2

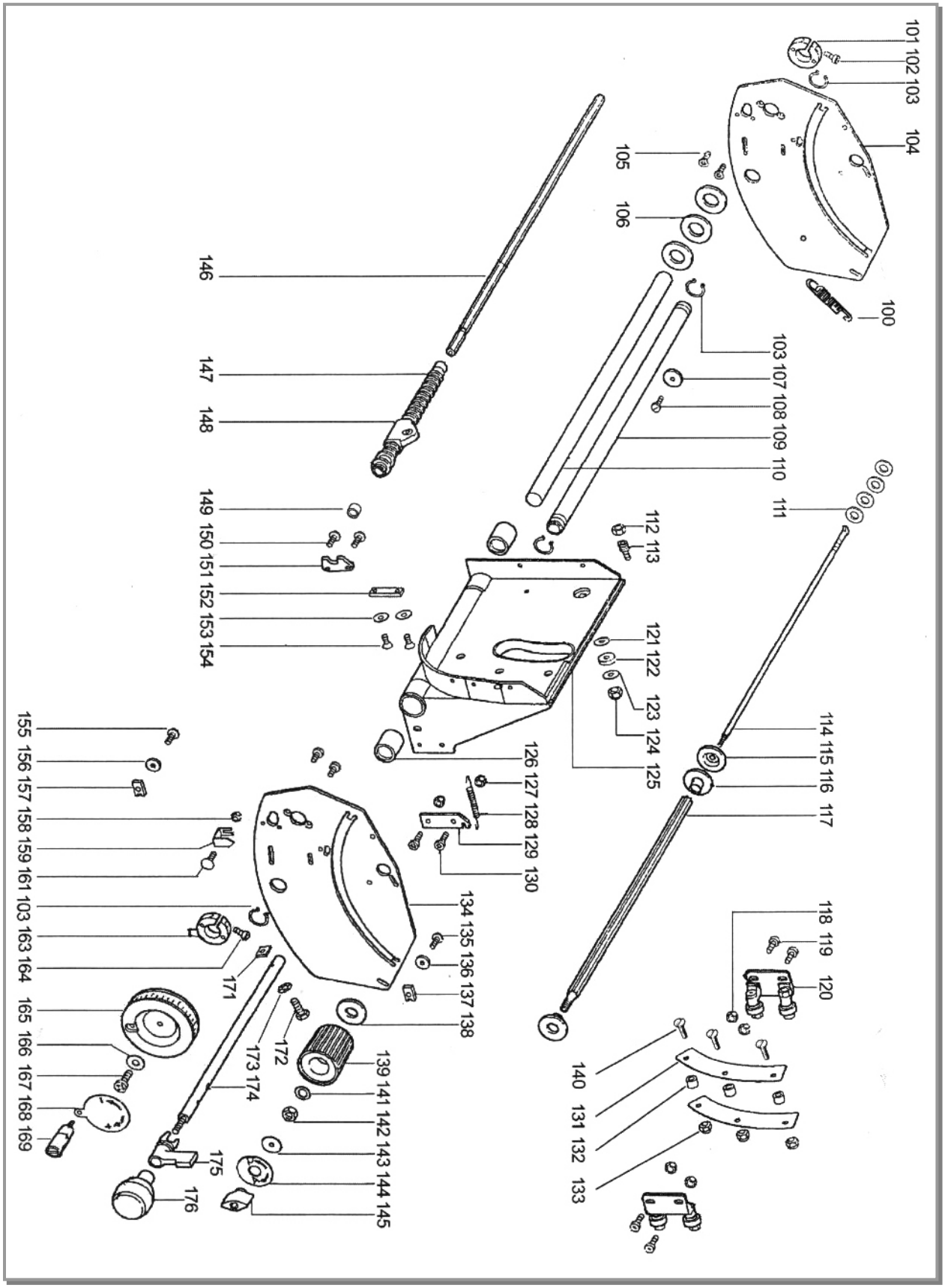
101 102 103 104
100
105
106
103 107 108 109 110 111
146
147
148
149 150 151 152 153 154
112 113
121 122 123 124 125
126 127 128 129 130
114 115 116 117
118 119 120
134 135 136 137 138
139 141 142 143 144 145
140 131 132 133
155 156 157 158 159 161 103 163 164 165 166 167 168 169
171
172
173 174
175
176

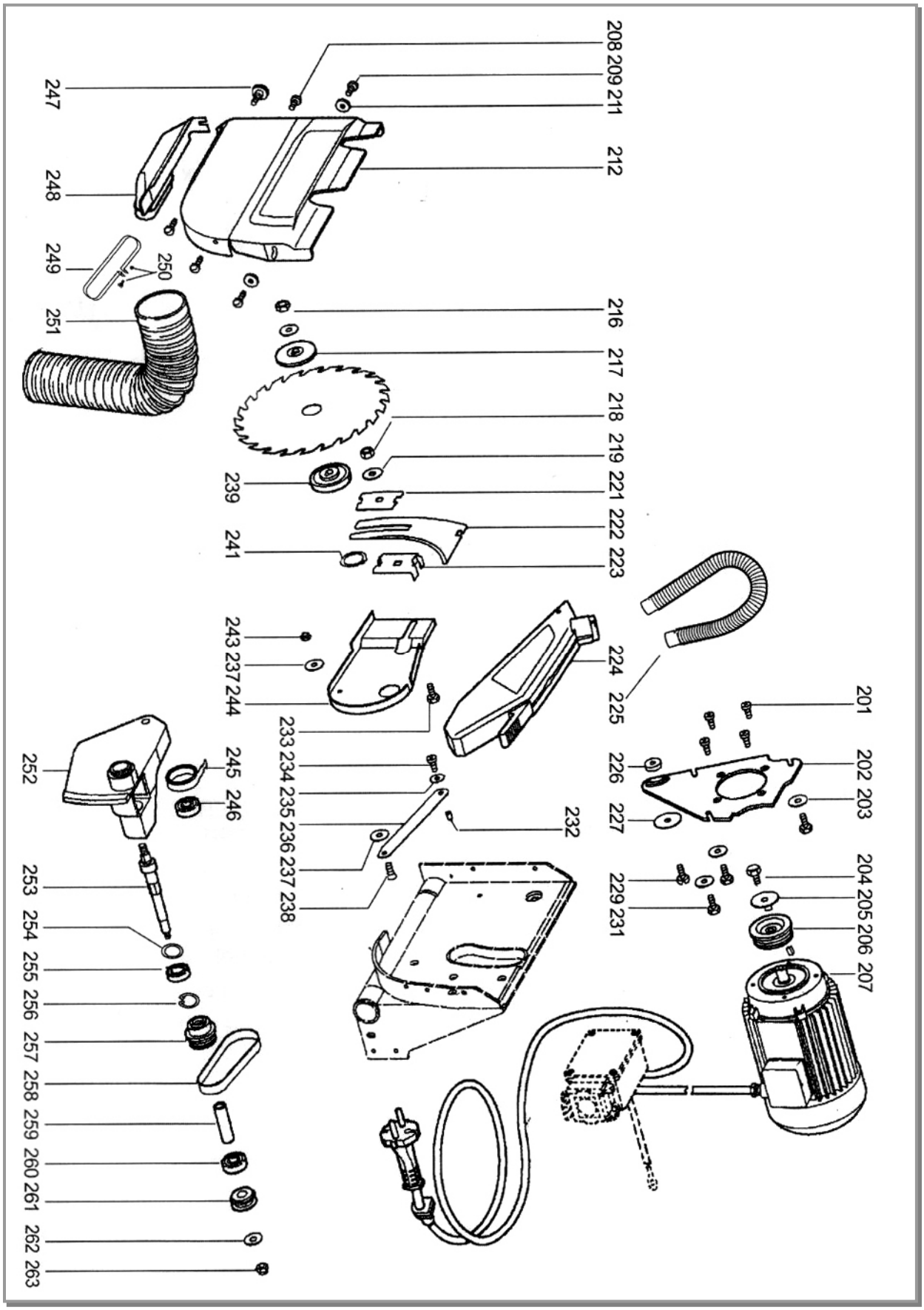
201
202 203
204 205 206 207
208 209 211
212
216
217
218
219 221
222 223
224 225
226 227
229 231
232
233 234 235 236 237 238
239
241
243 237 244
245 246
247
248
249
250
251
252
253 254 255 256 257 258 259 260 261 262 263

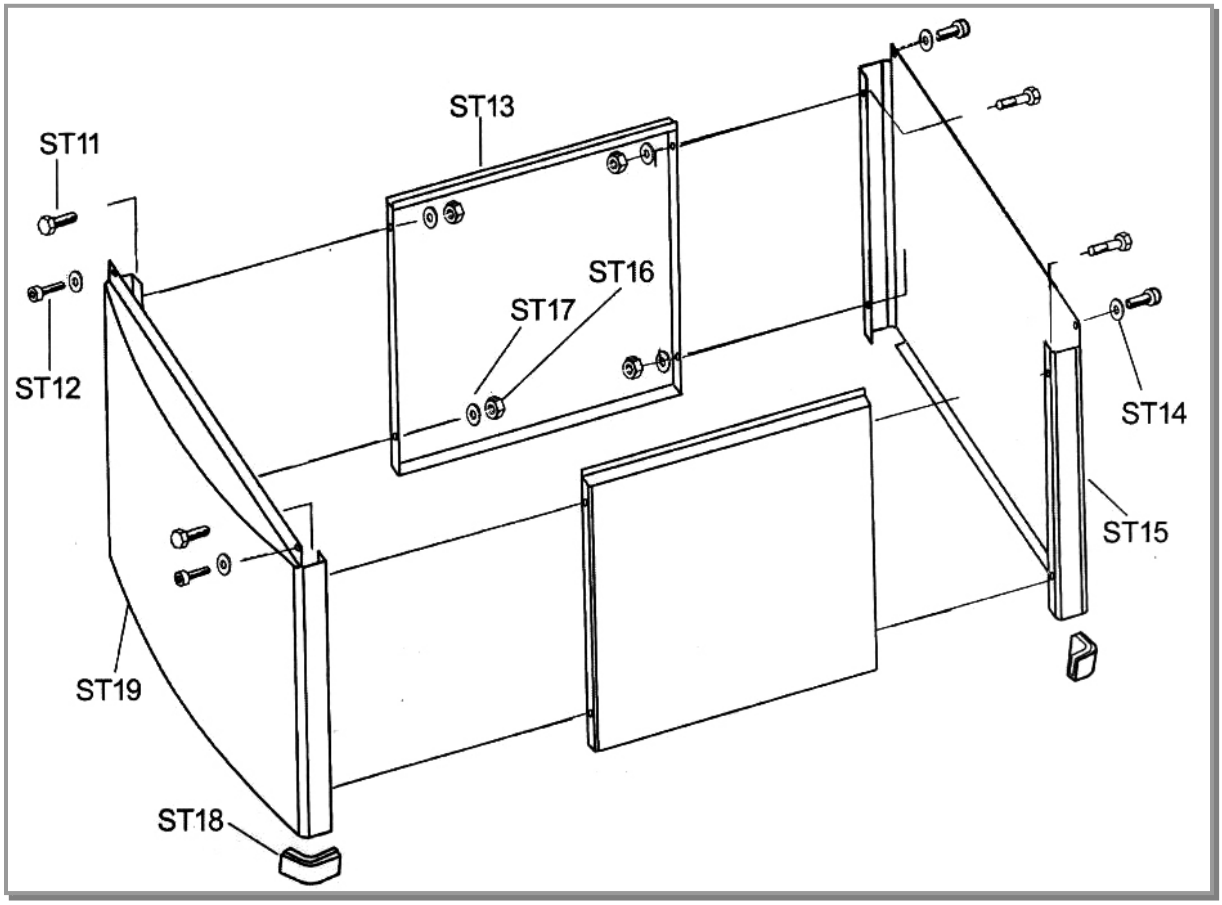

NO.	Recambio	NO.	Recambio
ST11	Hex head screw M6x15	ST16	Hex nut M6
ST12	Pan head screw M6x20	ST17	Flat washer M6
ST13	Stand side panel	ST18	Rubber feet
ST14	Flat washer M6	ST19	Stand front panel
ST15	Stand rear panel		

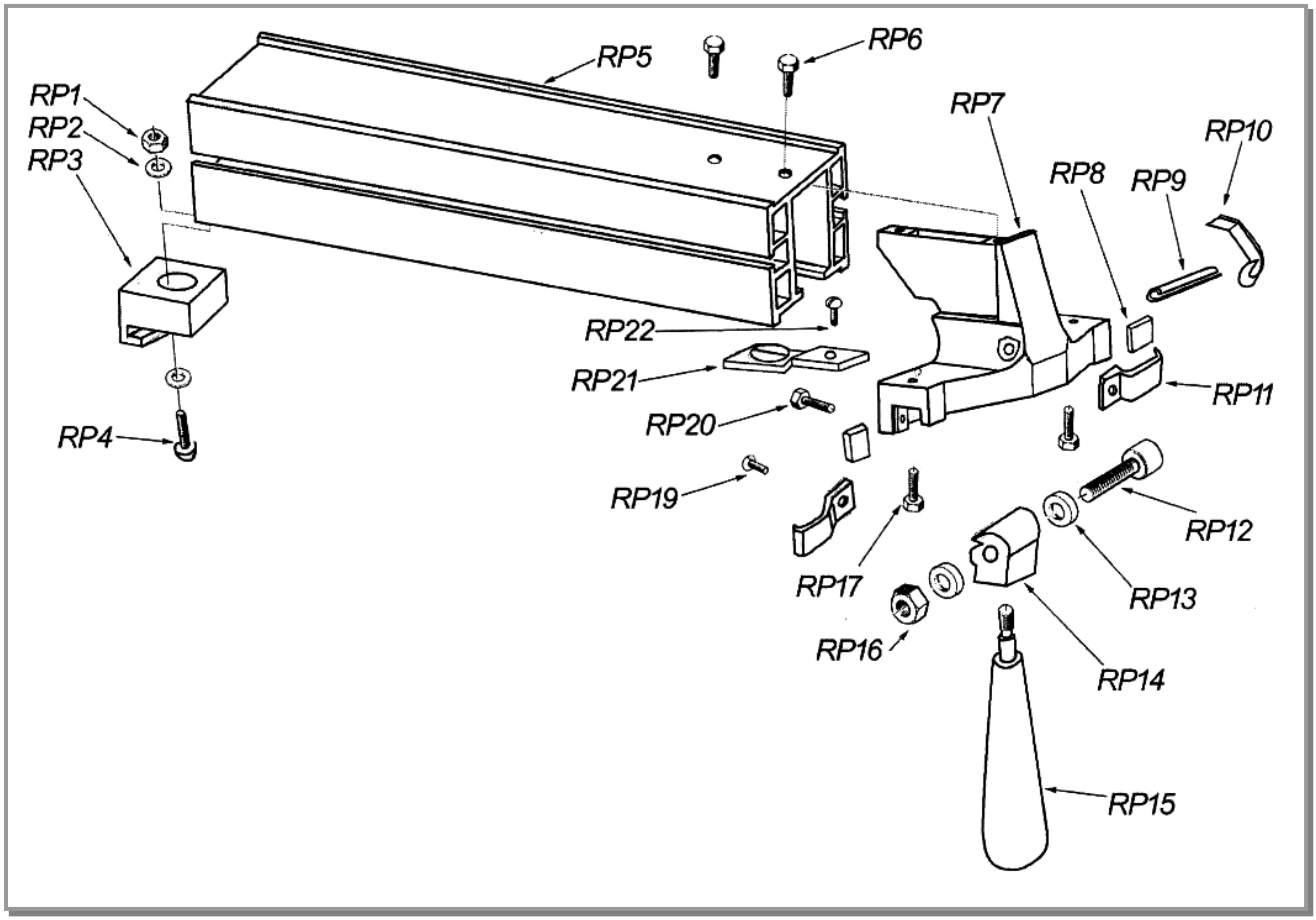

NO	Description	NO	Description
RP1	Hex nut M5	RP11	Clamp adjust
RP2	Flat washer 5 mm	RP12	Socket head screw M8x40
RP3	Fence hook	RP13	“O” ring 8x18
RP4	Pan head screw M5x30	RP14	Cam lock
RP5	Fence	RP15	Fence handle
RP6	Hex head screw M8x12	RP16	Hex nut M8
RP7	Fence head	RP17	Adjust screw
RP8	Rub piece	RP19	Pan head screw M4x10
RP9	Roll pin	RP20	Hex head screw M6x16
RP10	Spring	RP21	Lens
		RP22	Pan head screw M4x10

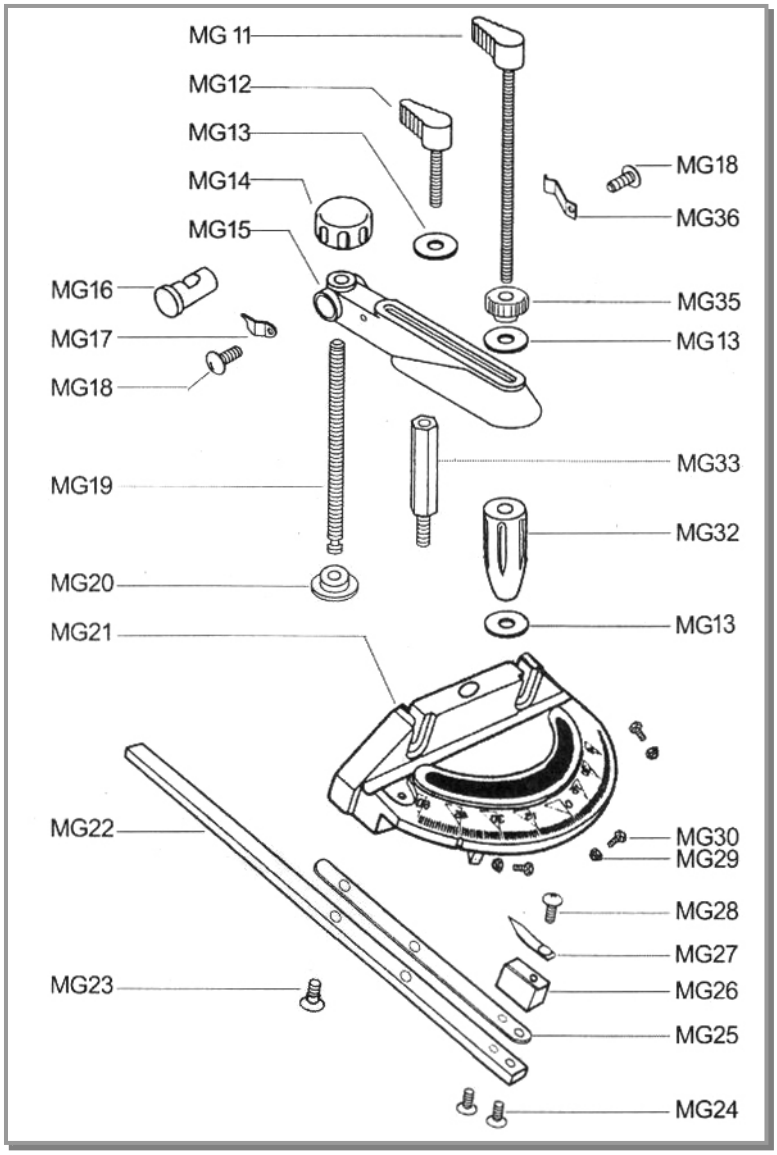

No.	Description
MG11	Lock knob, longer
MG12	Lock knob, shorter
MG13	Flat washer M6
MG14	Clamp knob
MG15	Clamp house
MG16	Quick release button
MG17	Lock tab
MG18	Tapping screw ST4.2x9.5
MG19	Clamp screw
MG20	Clamp holder
MG21	Miter gage base
MG22	"T" bar
MG23	Special screw
MG24	Pan head screw M4x12
MG25	Adjusting plate
MG26	Pointer mount
MG27	Pointer
MG28	Pan head screw M4x8
MG29	Hex nut M4
MG30	Hex head screw M4x16
MG32	Locking handle
MG33	Spacer
MG35	Knurled nut M6
MG36	Spring